Tel : +86-731-84391122 Fax : +86-731-85791635
Email : info@cncdfs.com
Website : www.cncdfs.com
Office add.: 14th Floor, Mid-Levels International, Labor EastRoad, Yuhua District, Changsha City, Hunan Province
Factory add.: Dalitang Village, Bishi Town, Miluo City, Hunan Province,China.

CDFS®

FILTRATION SYSTEMS FOR IRRIGATION

HUNAN DAWNING FILTER SYSTEM TECHNOLOGY CO.,LTD

Modern irrigation systems widely use sprinkler irrigation, drip irrigation and infiltrating irrigation systems. Most water used for Irrigation is deep well water, river water or reclaimed water that have poor quality.. Using such untreated water creates blockage in the irrigation systems reducing the efficiency and life span of the systems. The cost of both replacing the systems often and losing a crop due to bad irrigation is very high. The right solution is using Filtration systems on the main line.

CDFS header filtration systems for agricultural irrigation, provide stable, efficient and a low-cost solution for you.

Sand Filters Screen Filters Disc Filters Centrifugal Filters

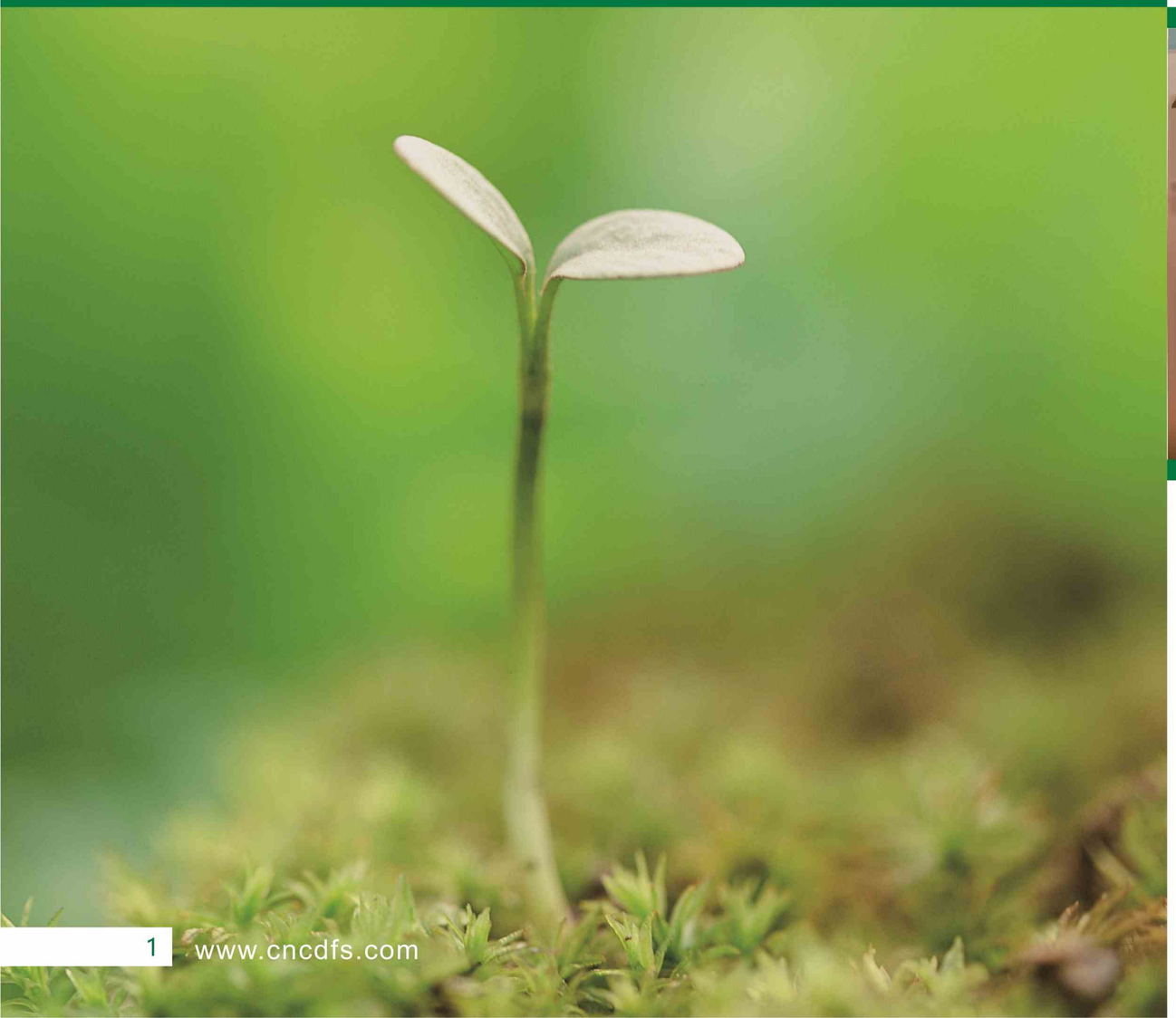

Sand Filters

- High flow rate with low pressure loss.
- Modularized setting, compact, with less piping reducing the investment.
- One or multi-parallel filtration units are available according to the requirement of irrigation project.

Screen Filters

- Entirely controlled by the hydraulic pressure in the pipeline, external power is not needed.
- Fully-automatic control.
- Automatic back wash.

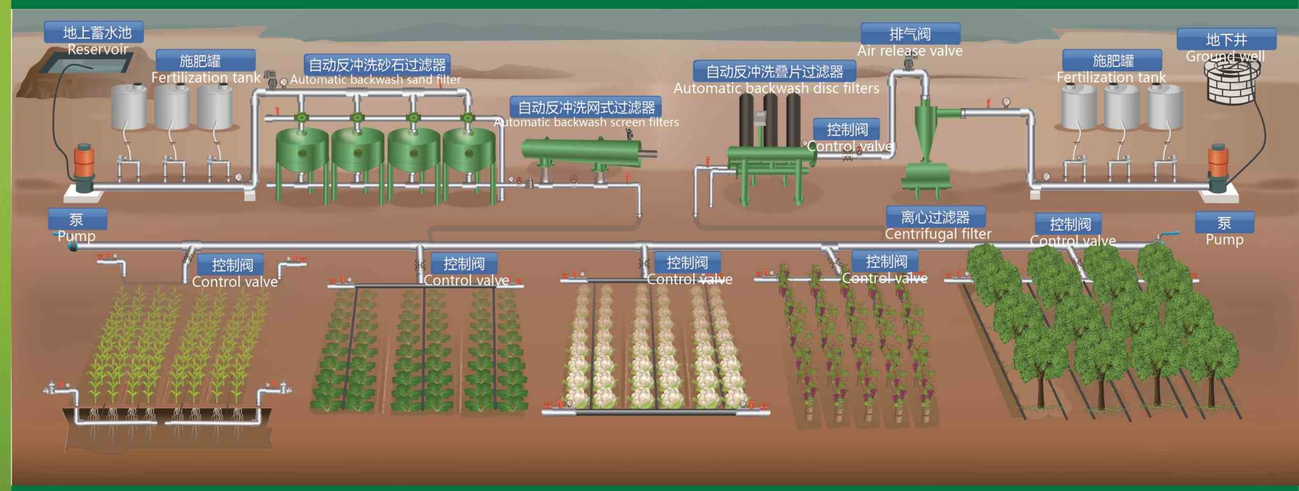

Disc Filters

- Automatic backwash and continuously water supply during flushing.
- High filtration precision, compact, flexible assembly.
- Filtering various impurities including inorganic impurities (sand, sediment, etc.), organic impurities (seeds, algae, floats, etc).

Centrifugal Filters

- Simple structure, low cost.
- Easy to install and operate. Maintenance-free.
- Small and large volume processing capabilities,saving installation space.

THE GALAXY

DMF SAND FILTER

Using three-dimensional filtration of sand, as primary filtration to deal with organic and inorganic impurities in water. Sand filters should be selected once the contents of organic impurities in the water is over 10mg/l.

Features :

1.High flow rate with low pressure loss.
2.Modularized setting, compact, with less piping reducing the investment.
3.One or multi-parallel filtration units are available according to the requirement of irrigation project.
4.Automatic backwash.

Three-port backwash valve
Metallic
High strength, more durable

Underdrain
Rod structure, high strength, long lifespan

Parameter					
Capacity / tank	Precision	Max pressure	Min pressure	Working Temp	Pressure loss
18-85m³/h	40Micron	10Bar	2Bar	≤65℃	≤0.2Bar
Control methods	Backwash time	Power supply	DC	Collector material	Skid mount package/easy to install
DP/time /manual	10-200 sec optional	220V/50Hz	6V/24V	SS/ABS	

NOTE: Pressure, material has special requirements can be customized, please consult us for details.

Technical data table

Model	Quantities of tank	Min flow rate(m³/h)	Max flow rate(m³/h)	Filtration area(m²)	Backwash flow rate(m³/h)	Max pressure	Water inlet/outlet	Drain outlet
DMF-2016-2A	2	16	27	0.4	13.5	0.8	2"	2"
DMF-2416-2A	2	27	50	0.56	22	0.8	3"	2"
DMF-2816-2A	2	36	60	0.77	30	0.8	4"	3"
DMF-3216-2A	2	60	80	1.0	40	0.8	4"	3"
DMF-3616-2A	2	75	100	1.28	50	0.8	4"	3"
DMF-4816-2A	2	100	180	2.26	85	0.8	6"	4"
DMF-4816-3A	3	150	270	3.39	85	0.8	8"	4"
DMF-4816-4A	4	200	360	4.52	85	0.8	8"	4"
DMF-4816-5A	5	250	450	5.65	85	0.8	10"	4"
DMF-4816-6A	6	300	540	6.78	85	0.8	10"	4"

NOTE: The actual flow is directly related to the water quality and precision , please consult us for details.

Dimension

Model	D (mm)	L1 (mm)	L2 (mm)	L3 (mm)	H1 (mm)	H2 (mm)	H3 (mm)
DMF-2016-2A	500	1130	600	530	175.5	1235	1470
DMF-2416-2A	600	1330	700	630	185.5	1285	1525
DMF-2816-2A	700	1510	800	720	242	1350	1625
DMF-3216-2A	800	1720	900	820	237	1400	1675
DMF-3616-2A	900	1910	1000	920	237	1435	1735
DMF-4016-2A	1000	2210	1200	1020	260	1515	1830
DMF-4816-2A	1200	2620	1400	1220	255	1615	1900

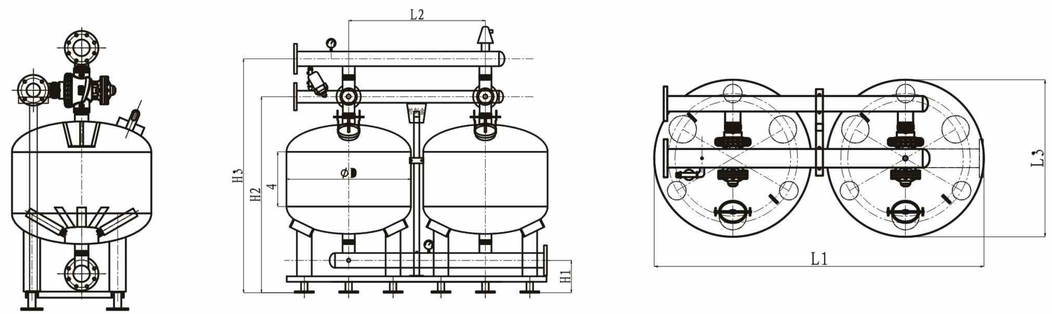

COMET

DLHF300 SCREEN SELF CLEANING FILTER

Using a stainless steel screen mesh to remove the silt, sand and scale dirt from the water. Irrigation water containing few organics could also be filtered. The available flow rate is from 10m^3/h to 200m^3/h.

Features :

1. Entirely controlled by the hydraulic pressure in the pipeline, external power is not needed.
2. Fully-automatic control.
3. Automatic back wash.

Piston
Made of SS
Longer lifespan

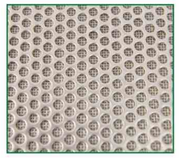

Screen
Woven type,
Large filtration area

Parameter					
Capacity	Precision	Max pressure	Min pressure	Working Temp	Pressure loss
10-200m^3/h	25-400Micron	10Bar	2Bar	≤65℃	≤0.1Bar
Control methods	Backwash time	Power supply	DC	Material of mesh	No external power required for the back washing
DP/time /manual	10-200 sec optional	220V/50Hz	6V/24V	SS316L	

NOTE: Pressure, material has special requirements can be customized, please consult us for details.

Technical data table

Model	Water inlet/outlet (mm)	Screen area (cm^2)	Flow rate (m^3/h)	Weight (Kg)
DLHF-302	50	1720	20	36
DLHF-303	80	1720	50	36
DLHF-304	100	1720	80	50
DLHF-304MAX	100	3430	100	72
DLHF-306	150	4330	130	86
DLHF-308	200	5500	200	161

NOTE: The actual flow is directly related to the water quality and precision , please consult us for details.

Dimension

Model	D1 (mm)	X (mm)	Y (mm)	H (mm)	H1 (mm)
DLHF-302	273	217	150	855	1100
DLHF-303	273	217	150	855	1100
DLHF-304	273	237	150	855	1630
DLHF-304MAX	273	237	400	1105	3000
DLHF-306	273	257	450	1255	4500
DLHF-308	325	283	560	1425	5780

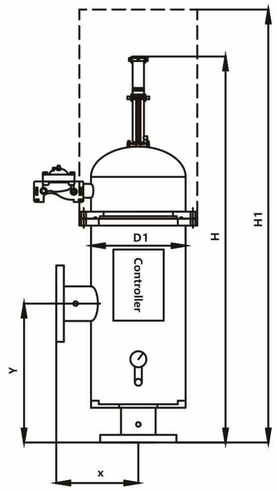

PLANET

DLHF400 SCREEN SELF CLEANING FILTER

Using a stainless steel screen mesh with both coarse and fine screens, to remove the silt, sand and scale dirt. Irrigation water containeing a low concentration of organic materials could be filtered as well. The available flow rate is from 50m³/h to 1000m³/h.

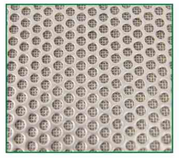

▲ Screen
Woven type,
Large filtration area

Features :

1.Entirely controlled by the hydraulic pressure in the pipeline, external power is not needed.
2.Fully-automatic control.
3.Automatic back wash.

◀ Piston
Made of SS
Longer lifespan

Parameter					
Capacity	**Precision**	**Max pressure**	**Min pressure**	**Working Temp**	**Pressure loss**
50-1500m³/h	25-400Micron	10Bar	2Bar	≤65℃	≤0.1Bar
Control methods	**Backwash time**	**Power supply**	**DC**	**Material of mesh**	No external power required for the back washing
DP/time /manual	10-200 sec optional	220V/50Hz	6V/24V	SS316L	

NOTE: Pressure, material has special requirements can be customized, please consult us for details.

Technical data table

Model	Water inlet/outlet (mm)	Screen area (cm²)	Flow rate (m³/h)	Weight (Kg)
DLHF-403	80	3220	50	140
DLHF-404	100	5780	100	170
DLHF-406	150	5780	150	183
DLHF-406MAX	150	8410	160	205
DLHF-408	200	5780	250	195
DLHF-408MAX	200	8410	300	235
DLHF-410	250	8090	350	250
DLHF-410MAX	250	8410	400	270
DLHF-410PLUS	250	11710	450	430
DLHF-412	300	11710	600	435
DLHF-414	350	12990	1000	455
DLHF-416	400	12990	1200	480
DLHF-416MAX	400	17020	1500	680

NOTE: The actual flow is directly related to the water quality and precision , please consult us for details.

Dimension

Model	D1 (mm)	L1 (mm)	L2 (mm)	L3 (mm)	H (mm)
DLHF-403	273	450	1575	2075	555
DLHF-404	273	900	1935	2735	555
DLHF-406	325	900	1935	2735	625
DLHF-406MAX	273	900	2275	3471	555
DLHF-408	325	900	2115	2915	625
DLHF-408MAX	325	900	2515	3715	625
DLHF-410	426	900	2315	3515	726
DLHF-410MAX	377	900	2515	3715	677
DLHF-410PLUS	426	1100	3115	4755	767
DLHF-412	426	1100	3155	4755	736
DLHF-414	480	1270	3155	4755	810
DLHF-416	480	1270	3155	4755	810
DLHF-416MAX	630	1270	3155	4755	1010

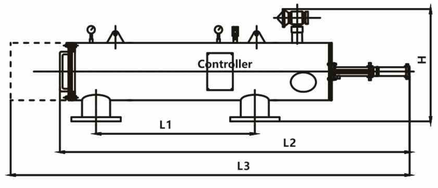

FIXED STAR

DLLF AUTOMATIC DISC FILTER

Used as the second level filtration to effectively remove fibrous impurities, having a high ability to catch soft impurities.

Features :

1.Automatic backwash and continuously water supply during flushing.

2.High filtration precision, compact, flexible assembly.

3.Filtering various impurities including inorganic impurities (sand, sediment, etc.), organic impurities (seeds, algae, floats, etc).

Disc filter
PA66 material
Victaulic design for easy opening

Disc filter element
PP material
Reliable filtering effect

Model	Inlet/outlet dia.	Flow rate	Dia. of pipe (DN)	H (mm)	H1 (mm)	H2 (mm)	D (mm)	L (mm)
DLLF-2-2	3 inch/80mm	≤30	80	884.5	150	413	776.5	615
DLLF-2-3	4 inch/100mm	45	100	904	160	432.5	796	890
DLLF-3-2	4 inch/100mm	60	100	1049	175	461	875	615
DLLF-3-3	6 inch/150mm	90	150	1074.5	175	486.5	933	890
DLLF-3-4	6 inch/150mm	120	150	1092	192.5	504	933	1165
DLLF-3-5	8 inch/200mm	150	150	1092	192.5	504	933	1440
DLLF-3-6	8 inch/200mm	180	200	1212	252. 5	570	1000	1715
DLLF-4-3	8 inch/200mm	176	150	1350	190	500	1200	950
DLLF-4-4	8 inch/200mm	210	200	1500	300	630	1200	1225
DLLF-4-5	8 inch/200mm	294	200	1500	300	630	1200	1500
DLLF-4-6	10 inch/250mm	352	250	1630.5	350	680	1200	1775

NOTE: The actual flow is directly related to the water quality and precision , please consult us for details.

3" units drawing

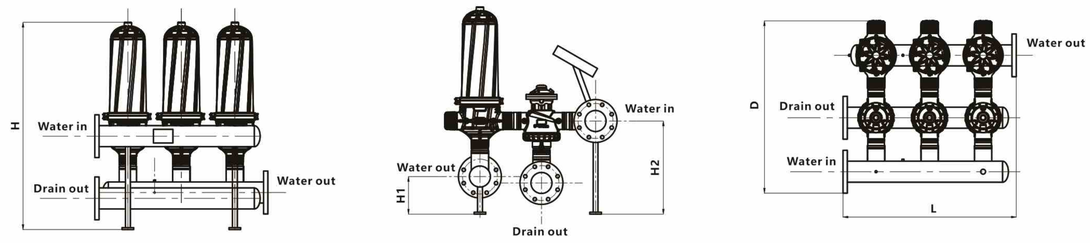

4" units drawing

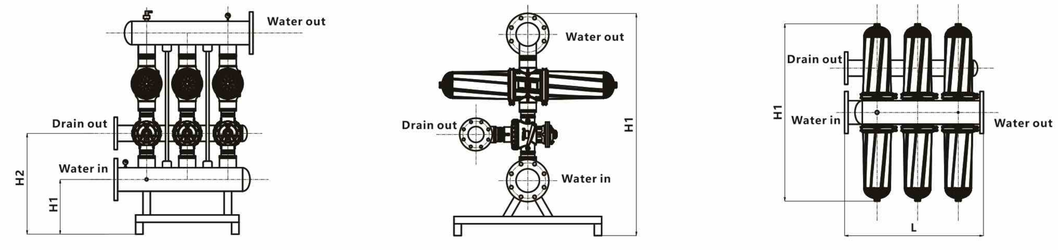

DLXL CENTRIFUGAL FILTER

Used as the primary filtration of groundwater and deep well water to remove large particles. Sand removal rate is up to 99%.

Features :

1. Simple structure, low cost.
2. Easy to install and operate. Maintenance-free.
3. Small and large volume processing capabilities, saving installation space.

Technical data table

Model	Inlet/outlet dia.	Flow rate (m^3/h)	Sand storage tank volume (h)	Average sand removal rate (%)
DLXL-50	2inch/50mm	20	20	> 99
DLXL-80	3inch/80mm	50	36	> 99
DLXL-100	4inch/100mm	80	60	> 99
DLXL-150	6inch/150mm	160	100	> 99

NOTE: The actual flow is directly related to the water quality and precision , please consult us for details.

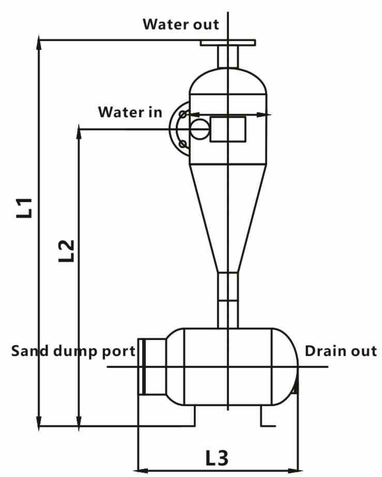

Dimension

Model	D (mm)	L1 (mm)	L2 (mm)	L3 (mm)
DLXL-50	219	850	1105	460
DLXL-80	273	905	1205	620
DLXL-100	325	1030	1330	740
DLXL-150	377	1300	1650	850

DLSD MANUAL SCREEN FILTER

The Screen filter is simple in structure and cheap in price. It adopts plastic or metal sieve. When the suspended particles exceed the size of the mesh, it willbetrapped to avoid fertilizers in the water and pesticide particles blocking the system.

When a certain amount of dirtaccumulates on the screen, the flow through the screen filter will significantly decrease, and it should be washed manually.

Technical data table

Model	Inlet/outlet dia.	Flow rate (m^3/h)
DLSD2-1	2inch/50mm	20
DLSD3-2	3inch/80mm	50
DLSD4-2	4inch/100mm	80
DLSD4-3	6inch/150mm	160

▲ Quick-opening
Easy to remove screen

▲ Ball valve
Quick to discharge

▲ Grooved connection
Easy to disassemble

① The case on site

② The case on site